SPD8-6

2.4 M | 8 FT STANDARD PERFORMANCE PARABOLIC REFLECTOR ANTENNA, DUAL-POLARIZED, 5.725-7.125GHZ

The SP Standard Performance Series by RadioWaves offers a full line of cost effective standard performance parabolic antennas engineered to deliver reliable radio links. Designed for both unlicensed and licensed band applications, RadioWaves field-proven pre-assembled SP antennas and robust pole-mounts ensure “set and forget” installation with minimal post-installation maintenance. If it’s rugged, it must be RadioWaves!

FEATURES AND BENEFITS

- Standard Performance Parabolic Antennas – Excellent performance for a wide range of licensed and unlicensed applications
- Fully Preassembled at the Factory – Simplifies installation on site and guarantees “factory-tested” quality
- Warranty – Industry leading 7-year warranty

SPECIFICATIONS

General

Antenna Type	Standard Performance Parabolic Reflector Antenna
Size, nominal	8 ft | 2.4 m
Polarization	Dual

Standard RF Connector Type	CPR137G
Standard RF Connector Suffix	RS (append suffix to model number)

Electrical

Operating Frequency Band	5.725 - 7.125 GHz
Half Power Beamwidth, Horizontal	1.5 degrees
Half Power Beamwidth, Vertical	1.5 degrees
Cross-Polarization Discrimination	30 dB
Front to Back Ratio (F/B)	48 dB

Gain, Low Frequency	41 dBi
Gain, Mid Frequency	42.1 dBi
Gain, High Frequency	43.2 dBi
VSWR	1.37:1
Return Loss	-16.1 dB

© RadioWaves, Inc. 2018. All Rights Reserved.

Mechanical

Fine Azimuth Adjustment	+/- 5 degrees	
Fine Elevation Adjustment	+/- 5 degrees	
Mounting Pipe Diameter, Min	4.5 inch | 11.4 cm	
Mounting Pipe Diameter, Max	4.5 inch | 11.4 cm	
Net Weight	165 lbs | 74.3 kg	250 lbs | 113.4 Kg with RD radome
Wind Velocity Operational	90 mph | 145 km/h	
Wind Velocity Survival Rating	125 mph | 201 km/h	

Mechanical Configuration	SP8	
Axial Force (FA)	3795 lbs | 16940 N	2773 lbs | 12334 Nm with RD radome
Side Force (FS)	1115 lbs | 4980 N	1422 lbs | 6325 Nm with RD radome
Twisting Moment (MT)	4800 ft-lbs | 6508 Nm	4400 lbs | 5966 Nm with RD radome
Operating Temperature Range	-40 to +60 C	
Max Pressure, PSIG, (if waveguide interface)	5	

Regulatory Compliance

FCC	Part 101 Cat. B1
Industry Canada Compliance	SRSP305.9B

ETSI	302217 R1 C1
RoHS-compliant	Yes

Shipping Information

Package Type	Wood Crate
Gross Weight	878 lbs | 398.2 kg

Dimensions, L x W x H	0 x 0 x 0in | 0 x 0 x 0 cm
Shipping Volume	0 cu ft | 0 cu m

*Additional OEM interfaces and adapters may be available. Contact RadioWaves for a complete and current list of available adapters.

© RadioWaves, Inc. 2018. All Rights Reserved.

TECHNICAL DRAWINGS

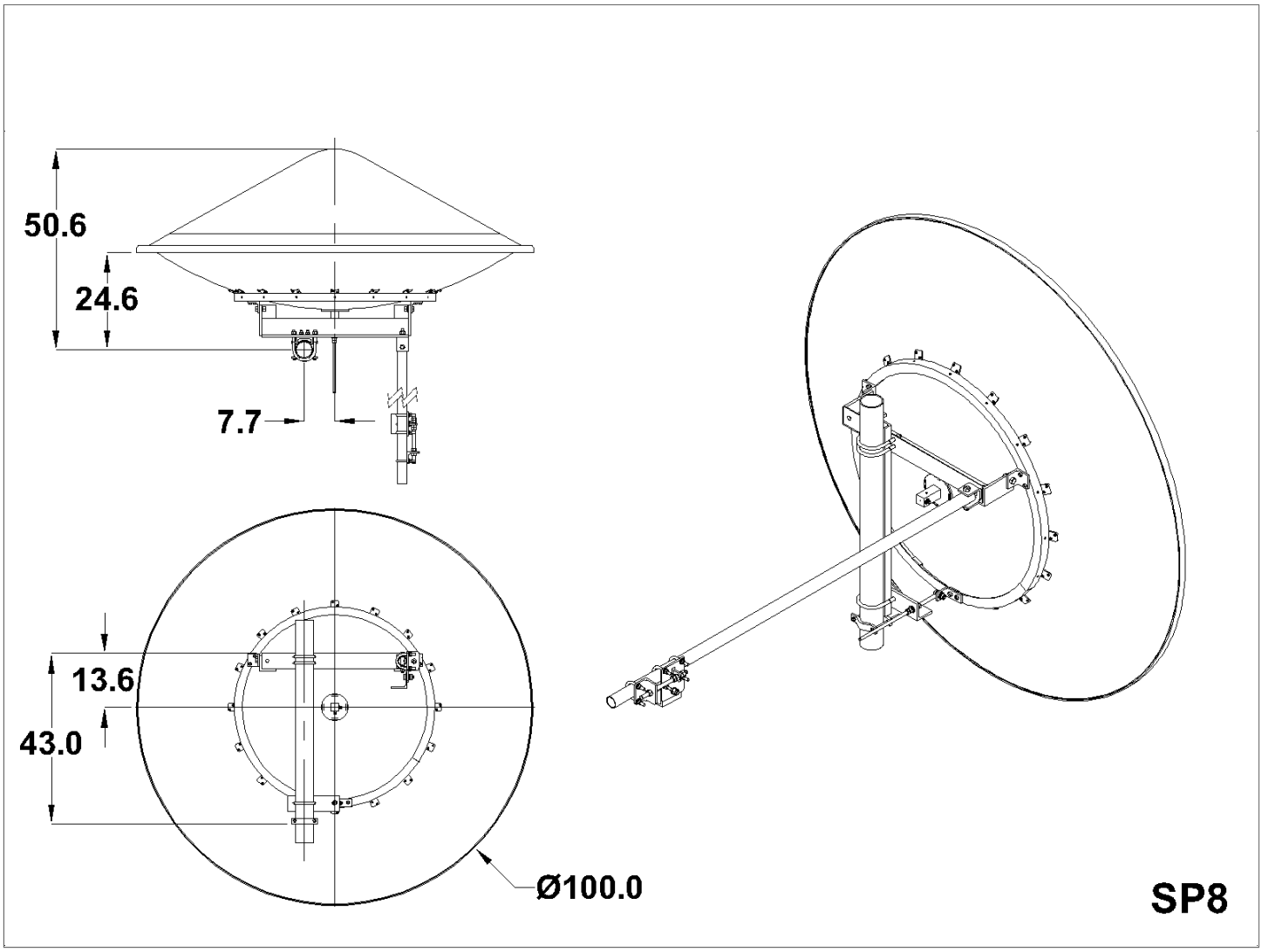

© RadioWaves, Inc. 2018. All Rights Reserved.